TECHNICAL DATA

MODEL		FGP 20/M	FGP 30/M	FGP 50/M
Flow min 1°st./min 2°st.-max 2°st. *	[kg/h]	3/10-20	8/13-30	10.5/20-50
Thermal power min 1°st./min 2°st.-max 2°st. *	[Mcal/h]	31/102-204	81/132-306	107/204-510
Thermal power min 1°st./min 2°st.-max 2°st. *	[kW]	36/118-237	94/153-355	124/237-592
Fuel : LIGHT-OIL 1.5° E to 20° C = 6.2 cSt = 35 sec Redwood N° 1				
Intermittent working operation (min. 1 stop every 24 hours) two stages progressive or modulating				
Environmental conditions operation / storage : -15...+40°C / -20...+70°C , rel. humidity max. 80%				
Max temperature combustion air	[°C]	60	60	60
Fan motor	[kW]	0.75	1.1	1.1
Power supply:		1/N~230V-50Hz	3~400V,1/N~230V-50Hz	3~400V,1/N~230V-50Hz
Degree of electric protection:		IP44	IP44	IP44
Weight burner **	[kg]	50	50	51

* Conditions of reference: Environment temperature 20°C - barometric pressure 1013 mbars - Altitude 0 m o.s.l.

** For burner with long head add 2 kg weight.

OPERATING RANGE DIAGRAM: Thermal power-Pressure in the combustion chamber

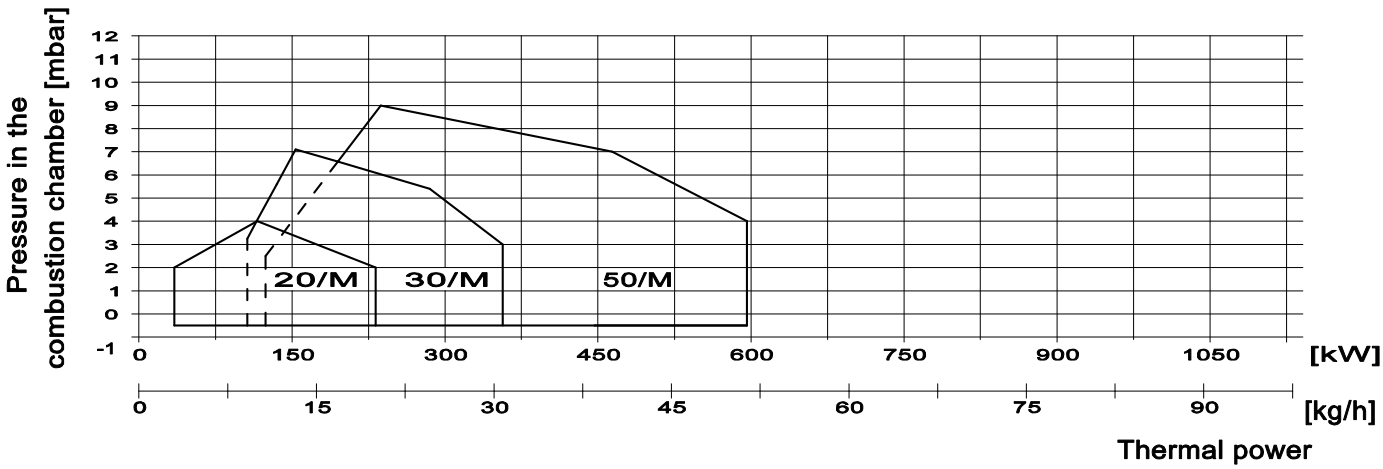

DIMENSIONS [mm]

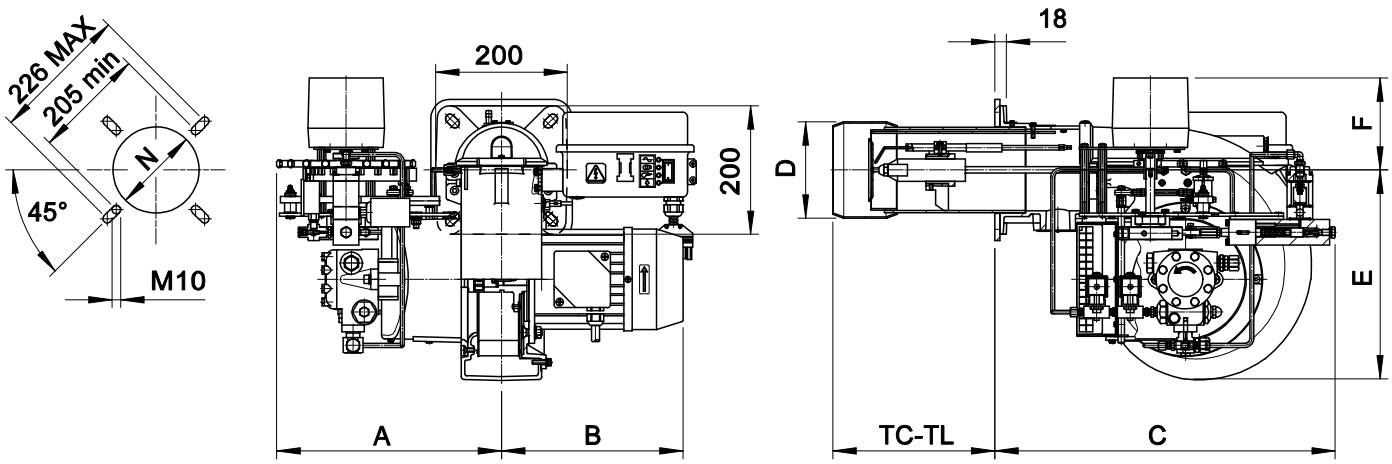

MODEL	A	B	C	D	E	F	N	TC	TL
FGP 20/M	350	282	530	125	327	220	135	250	335
FGP 30/M	350	305	530	125	327	220	135	250	335
FGP 50/M	350	305	530	150	327	220	160	250	335